DALSANTO INDUSTRIES

DOWNLOAD ALL TECHNICAL DOCUMENTS

CATERING

BLAST CHILLER

STANDARD - 15 TRAYS

Model:

PBCN151164+90XX

Evaporator with cataphoretic coating, easy to clean by opening the fan door from inside the cell. Manual defrosting, removable drain pan at the bottom of the machine. Possibility of selecting chilling (+3°C at core) or freezing (-18°C at core) by temperature or by time. Condensate water drainage into pan via pipe. N.1 - reversible opening door, automatic closure and fixed opening at 100°. Easily removed, triple chamber magnetic seal. Rounded corners inside for easy and optimal cleaning. Removable tray rack in AISI 304 stainless steel.

TECHNICAL DATA

Gross volume (L)	255
Climate class	5 (+40°C / 40% R.H.)
Refrigerant gas	R452a
GWP	2141
Refrigerant charge (kg)	1.930 kg
Defrosting	AIR
Condensate evaporation	Condensate water drainage into pan via pipe.
Condensation	AIR
Cooling output (W)	10263 / 3624
Chilling performance (kg)	70.0 (+90 °C/+3 °C)
Chilling cycle time (min)	96 (+65 °C/+10 °C)
Freezing performance (kg)	45.0 (+90 °C/-18 °C)
Freezing cycle time (min)	262 (+65 °C/-18 °C)
Ambient operating temperature (°C)	(+20/+40)
Cell working temperature (°C)	(-40/+65)
Energy consumption (kWh/kg)	0,104 / 0,396
Voltage	AC400V 3N+T 50Hz
Special voltages (on request)	Optional
Absorbed power (W)	5000
Current draw (A)	7,60

CONSTRUCTION DATA

Category	Upright - High performance
Intended use	Blast chilling - This appliance is intended for use in ambient temperatures up to 40°C.
Internal material	AISI 304 Stainless Steel
External material	AISI 304 Stainless Steel (bottom and back in galvanized steel)
Internal corners	Rounded corners inside for easy and optimal cleaning.
Insulation thickness (mm)	60
Insulation material	HFO Polyurethane (No CFC, no HCFC)
Door seal	Easily removed, triple chamber magnetic seal.
Door hinge	Standard left, reversible
Controller	Digital control panel
Alarm	Visual and audible
NTC temperature probe	Standard
USB connector for downloading recorded data as per HACCP	Not available
Floor support	Adjustable legs in AISI 304 stainless steel
Floor support height (mm)	Legs: 100-150 Castors: 110 - Ø 80

SEDE OPERATIVA / PLACE OF BUSINESS
Via Fabio Filzi, 46 - 31036 Istrana (TV) – Italy
+39 0422 832679 / **info@dal-mec.it**

SEDE LEGALE / REGISTERED OFFICE
Dal Santo Srl - Via Sant'Anna, 38 - 31050 Fossalunga di Vedelago (TV) – Italy
Partita IVA / VAT number 04207260268

Il costruttore può apportare modifiche ai prodotti senza preavviso. / The manufacturer reserves the right to modify any product without prior notice. / Veranderungen an den produkten konnen vom hersteller ohne vorankundigung vorgenommen werden. / Des modifications aux produits peuvent etre apportees sans preavis du constructeur. / El fabricante se reserva el derecho de modificar cualquier producto sin previo aviso.

Unless stated otherwise,
values are expressed in mm
and are indicative and not binding.

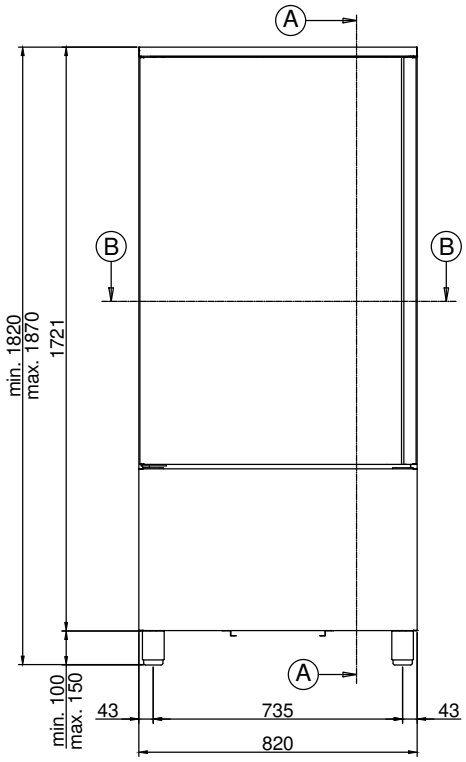

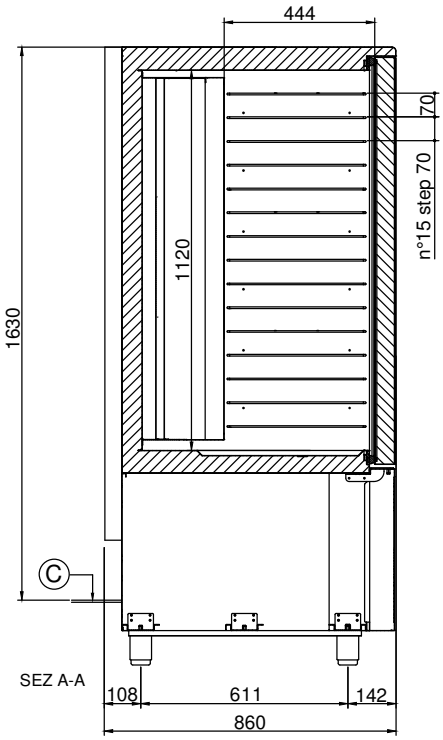

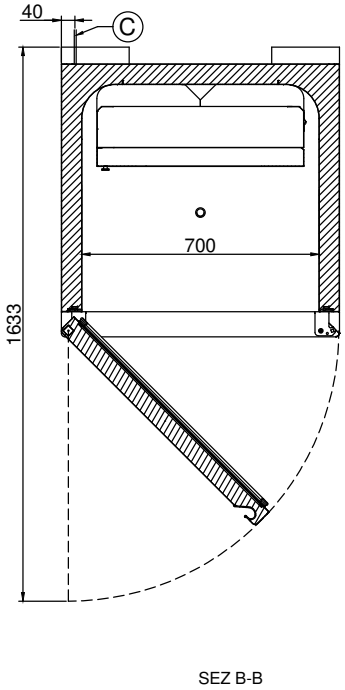

A. Viewing plane

B. Viewing plane

C. Power cable outlet (length 2 m)

WARNING! While installing, have a qualified electrician connect it to an electrical panel.

Minimum clearances

WARNING! The distance from hot appliances (e.g. fryers or ovens) must be at least 500 mm.

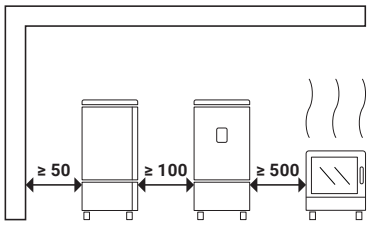

EQUIPMENT AND FITTINGS

Internal fittings	Removable tray rack in AISI 304 stainless steel.
Trays included	N.1 - EN 600x400 - Stainless steel
Maximum load per tray (kg)	-
Maximum setup capacity	N.15 - GN 1/1 530x325 or EN 600x400
Wi-Fi kit	Not available
Bluetooth kit	Not available
Core probe	Standard
Germicidal UV lamps for internal cell sterilisation	Not available
Castors kit	Optional
Cable with Schuko or English plug	Optional

DIMENSIONS AND WEIGHTS

Dimensions LxDxH (mm)	820x860x1820-1870
Package LxDxH (mm)	850x900x1975
Net weight (kg)	219
Gross weight (kg)	232

SEDE OPERATIVA / PLACE OF BUSINESS
Via Fabio Filzi, 46 - 31036 Istrana (TV) – Italy
+39 0422 832679 / **info@dal-mec.it**

SEDE LEGALE / REGISTERED OFFICE
Dal Santo Srl - Via Sant'Anna, 38 - 31050 Fossalunga di Vedelago (TV) – Italy
Partita IVA / VAT number 04207260268

Il costruttore può apportare modifiche ai prodotti senza preavviso. / The manufacturer reserves the right to modify any product without prior notice. / Veranderungen an den produkten konnen vom hersteller ohne vorankundigung vorgenommen werden. / Des modifications aux produits peuvent etre apportees sans preavis du constructeur. / El fabricante se reserva el derecho de modificar cualquier producto sin previo aviso.