DALSANTO INDUSTRIES

DOWNLOAD ALL TECHNICAL DOCUMENTS

CATERING

REMOTE REFRIGERATED COUNTER

PLUS - 700 - SLIM - UPSTAND

Model:

PPCT702GTSRALXX

Ventilated evaporator, complete with gas filter thermostatic valve, easily removed for quick and easy maintenance/replacement. Evaporator with cataphoretic coating, automatic defrost managed by digital controller. Remote condenser unit available (option). Condensate water drainage via down pipe or condensate evaporation kit (option). N.2 - doors with automatic closure and fixed opening at 100°. Easily removable, triple chamber magnetic seal. Rounded internal corners for easy and optimal cleaning. AISI 304 stainless steel guides and racks - Adjustable and removable.

TECHNICAL DATA

Temperature (°C)	(-22/-18)
Energy class	-
Annual energy consumption AEC (kWh/annum)	-
Energy efficiency index EEI	-
Daily energy consumption E24 h (kWh)	-
Gross volume (L)	280
Net chilling volume (L)	-
Net freezing volume (L)	187
Climate class	-
Refrigerant gas	R452a
GWP	2141
Refrigerant charge (kg)	-
Defrosting	ELECTRIC
Condensate evaporation	Condensate water drainage via down pipe or condensate evaporation kit (option).
Condensation	AIR
Cooling output (W)	550
Voltage	AC230V 1N+E 50Hz
Special voltages (on request)	Option
Absorbed power (W)	60
Current draw (A)	-
Noise (dB)	< 70

CONSTRUCTION DATA

Category	Counter - High performance
Intended use	Storage - This appliance is intended for use in ambient temperatures up to 40 °C.
Internal material	AISI 304 Stainless steel
External material	AISI 304 Stainless Steel (bottom in galvanized steel)
Internal corners	Rounded internal corners for easy and optimal cleaning.
Insulation thickness (mm)	60
Insulation material	HFO Polyurethane (No CFC, no HCFC)
Door seal	Easily removable, triple chamber magnetic seal.
Description of worktop	AISI 304 stainless steel thickness 10/10 with rounded corners at the front and at the base of upstand.
Controller	Capacitive touch screen
Alarm	Visual and audible
NTC temperature probe	Standard
Floor support	Adjustable feet in AISI 304 stainless steel
Floor support height (mm)	Feet: 100-150 Castors: 110 - Ø 80

SEDE OPERATIVA / PLACE OF BUSINESS
Via Fabio Filzi, 46 - 31036 Istrana (TV) – Italy
+39 0422 832679 / **info@dal-mec.it**

SEDE LEGALE / REGISTERED OFFICE
Dal Santo Srl - Via Sant'Anna, 38 - 31050 Fossalunga di Vedelago (TV) – Italy
Partita IVA / VAT number 04207260268

Il costruttore può apportare modifiche ai prodotti senza preavviso. / The manufacturer reserves the right to modify any product without prior notice. / Veranderungen an den produkten konnen vom hersteller ohne vorankundigung vorgenommen werden. / Des modifications aux produits peuvent etre apportees sans preavis du constructeur. / El fabricante se reserva el derecho de modificar cualquier producto sin previo aviso.

Unless stated otherwise, values are given in mm and are indicative and not binding.

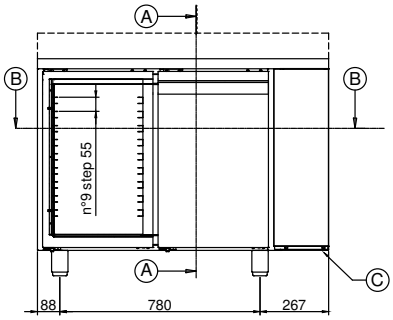

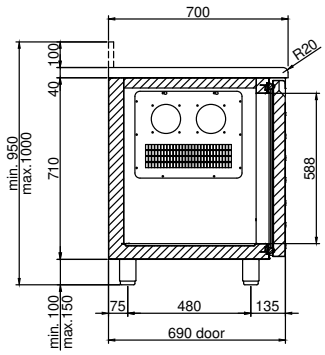

SEZ. A-A

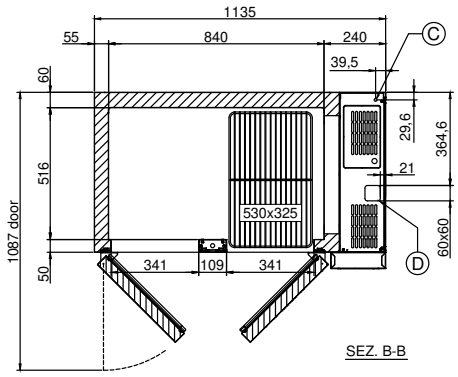

SEZ. B-B

A. Section plane

B. Section plane

C. Power cable outlet (length 2 m)

WARNING! While installing, have a qualified electrician connect it to an electrical panel.

D. Gas pipes outlet (Ø 6 mm delivery and Ø 10 mm suction)

Ready for remote motor.

Minimum clearances

WARNING! The distance from hot appliances (e.g. fryers or ovens) must be at least 500 mm.

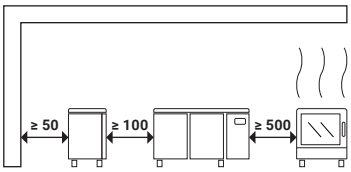

EQUIPMENT AND SETUPS

Internal setup	AISI 304 stainless steel guides and racks - Adjustable and removable.
Trays included	N.1 per door - GN 1/1 530x325 - Plastic coated
Maximum load per tray (kg)	42
Pairs of guides included	N.1 “C” per door - GN 1/1 530x325
Maximum setup capacity	N.9 (step 55 mm) per door - GN 1/1 530x325
Drawers	Option (Interchangeability between doors and drawers)
LED bar	Not available
Wi-Fi kit	Option
Bluetooth kit	Option
Lock with key	Not available
Air distribution duct	Not available
Front removable motor	Not available
Openable control panel	Not available
Castors kit	Option
Cable with Schuko or English plug	Standard

DIMENSIONS AND WEIGHTS

Dimensions LxDxH (mm)	1135x700x950-1000
Package LxDxH (mm)	1320x730x1100
Net weight (kg)	79
Gross weight (kg)	92

SEDE OPERATIVA / PLACE OF BUSINESS
Via Fabio Filzi, 46 - 31036 Istrana (TV) – Italy
+39 0422 832679 / **info@dal-mec.it**

SEDE LEGALE / REGISTERED OFFICE
Dal Santo Srl - Via Sant’Anna, 38 - 31050 Fossalunga di Vedelago (TV) – Italy
Partita IVA / VAT number 04207260268

Il costruttore può apportare modifiche ai prodotti senza preavviso. / The manufacturer reserves the right to modify any product without prior notice. / Veranderungen an den produkten konnen vom hersteller ohne vorankundigung vorgenommen werden. / Des modifications aux produits peuvent etre apportees sans preavis du constructeur. / El fabricante se reserva el derecho de modificar cualquier producto sin previo aviso.